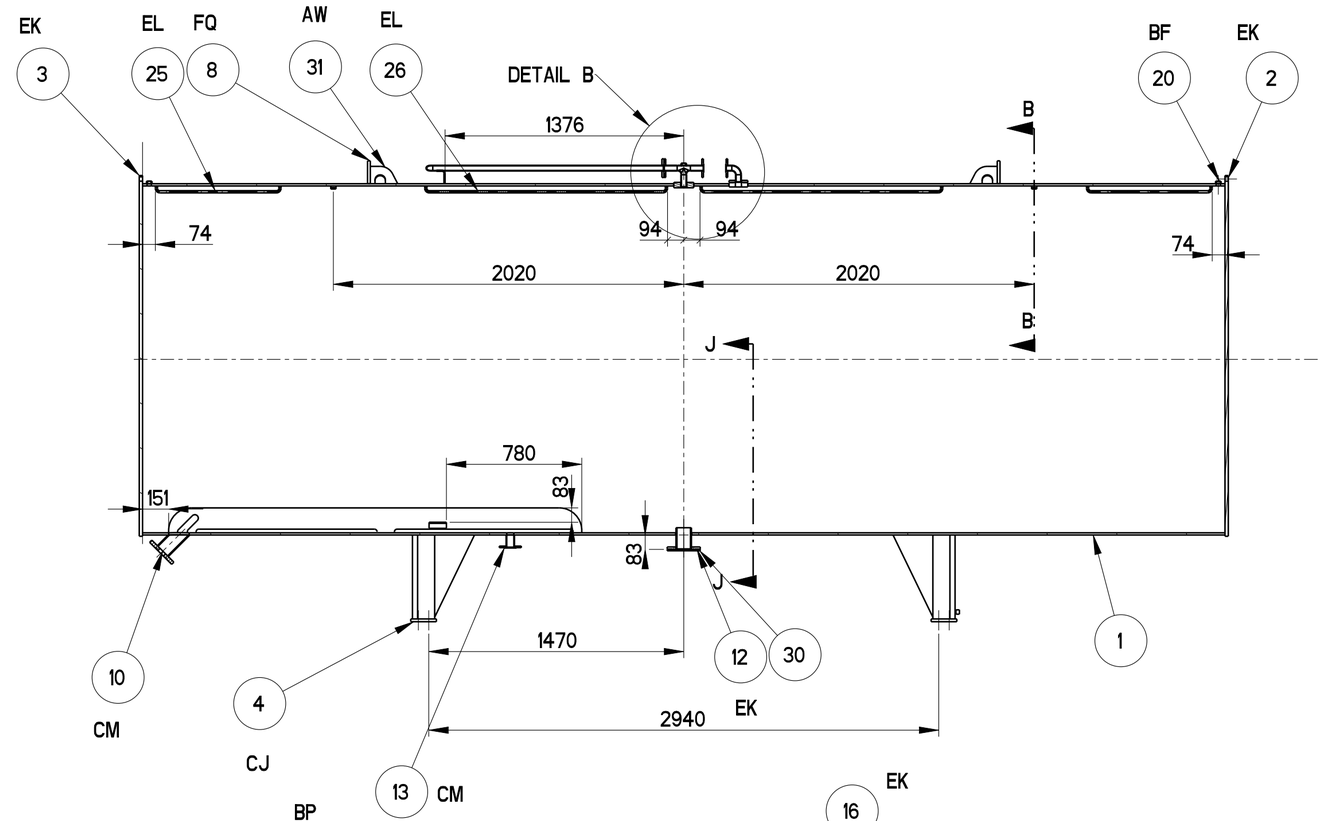

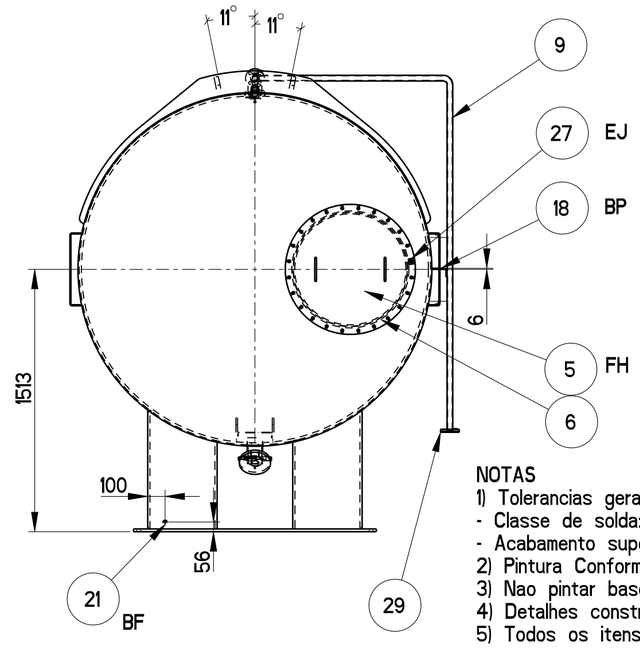

NOTAS
1) Tolerancias gerais: 1ZBR1001-176 CL.B
- Classe de solda: 1ZBR1001-177 CL.3 c/ 100% LP
- Acabamento superficial: 1ZBR1001-178.
2) Pintura Conforme OH2
3) Nao pintar base de aterramento.
4) Detalhes construtivos conforme 1ZBR200003-302
5) Todos os itens devem ser fabricados com os materiais indicados na coluna material ID desenhos padrões usados referencia construtiva e dimensional.

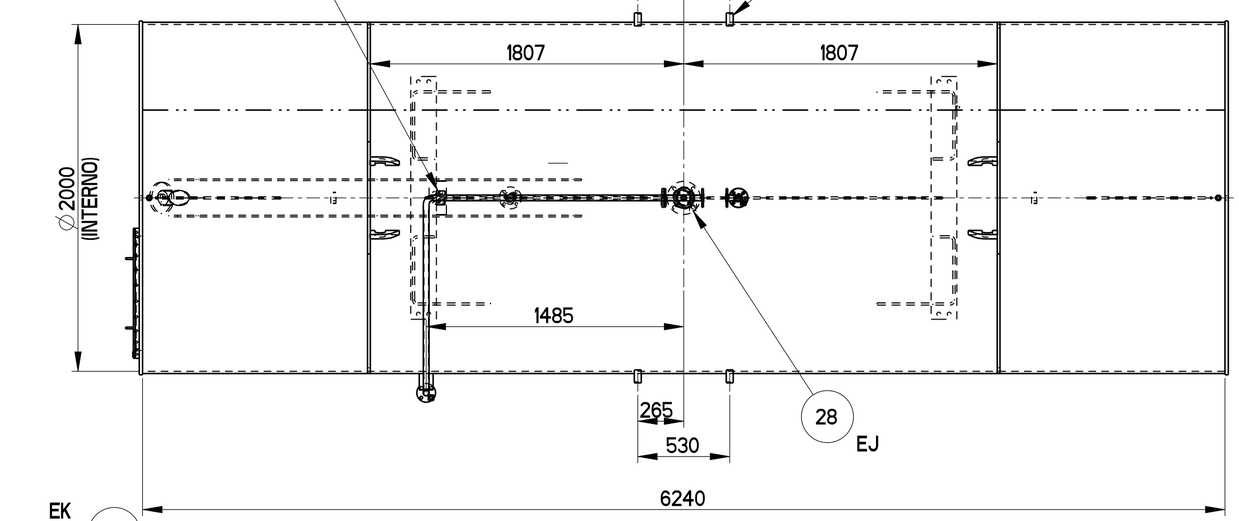

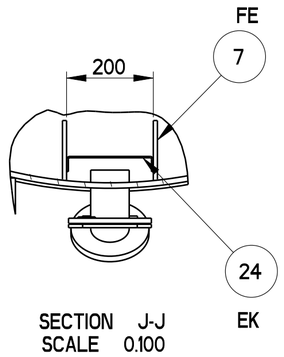

SECTION J-J
SCALE 0.100

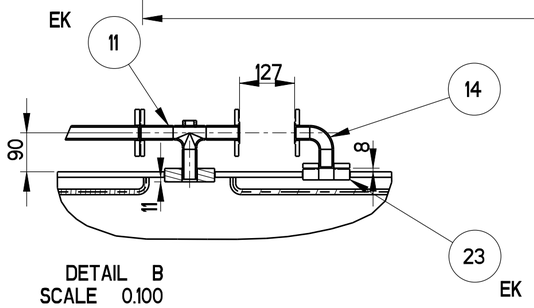

DETAIL B
SCALE 0.100

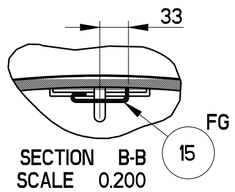

SECTION B-B
SCALE 0.200

Item	Qty		CODE	Dimension	Material ID	Description	Mass
31	4		1ZBA467027-AC		ASTM A572	OLHAL	2.5
30	1		1ZBA253125-F			TPA TRANSPORTE	1.7
29	1		1ZBA253125-C			TPA TRANSPORTE	0.4
28	1		1ZBA215013-D			BASE ATERRAMENTO	0.0
27	5		1ZBA215013-C			BASE ATERRAMENTO	0.0
26	2		1ZBR200003-597	A=1387		APOIO BOLSA	1.4
25	2		1ZBR200003-597	A=712		APOIO BOLSA	0.8
24	1		1ZBR200003-598			APOIO BOLSA	0.6
23	1		1ZBA253123-C		ASTM A572	FLG CANAL SOLD	1.6
21	1		1ZBR200034-1			PORCA ATERR	0.1
20	2		BR21260020-9			PORCA REDONDA	0.1
18	1		1ZBR200092-100	A=95	ASTM A572	SUP L TUBO	0.5
17	1		1ZBR200092-78	A=78	ASTM A572	SUP L TUBO	0.4
16	4		1ZBA467048-B		ASTM A572	SUP LOGO	1.0
15	2		1ZBA217004-AR		ASTM A572	SUPORTE BOLSA	0.1
14	1		1ZBR200001-AFT	A=73; B=82	ASTM A572	TUBO SEC 1 CURVA 1	1.5
13	1		1ZBR200503-68		ASTM A572	EXT VALV 1 1/2 ANSI	1.0
12	1		1ZBR200504-1	A=125	ASTM A572	EXTENSAO 3POL	3.4
11	1		1ZBR200001-AFU	A=230; B=113	ASTM A572	EXT CONSERV T	4.1
10	1		1ZBA467002-NP		ASTM A572	EXT IND NIVEL	4.9
9	1		1ZBR200001-AHK	A=1995; B=1043; C=1329	ASTM A572	TUBO P/ SECADOR	12.4
8	2		1ZXX477597C7176			REFORCO OLHAL	24.0
7	2		1ZXX467019C7176			PROTECAO BOLSA	21.3
6	1		1ZBA253145-E		ASTM A572	FLG TPA INSP	20.6
5	1		1ZBA253141-E		ASTM A572	TAMPA DE INSPEÇÃO	34.3
4	2		1ZBR200986-21	A=700	ASTM A572	BASE SUP CONSERV	119.4
3	1		1ZBR200897-202			TPA CONSERV	436.7
2	1		1ZBR200500-202			TAMPA CONSERV	487.7
1	1		1ZXX467092C7176			CHAPA CONSERVADOR	3929.8

Rev Ind	Revision	Appd	Date

Based on	Reg. No.	Title	Scale 0.040
Prepared ETNomura Feb-04-22	Responsible department PGTR/TD	CONSERVADOR SOLD	
Approved HSousa	Take over department		en
Revision	Mass 5289.8 kg	Order BRT-24364	Page 1
HITACHI ENERGY		Document No. 1ZXX467005C7176	Total 1

Production engineering review
Design engineering review
Inspection engineering review

We reserve all rights in this document and in the information contained herein. Reproduction, use or disclosure to third parties without express authority is strictly forbidden. ABB